Parts List			
Qty	Part Number	Material	Mass
1	2026-02-12-05-59-39-106	Steel	1796.40 g

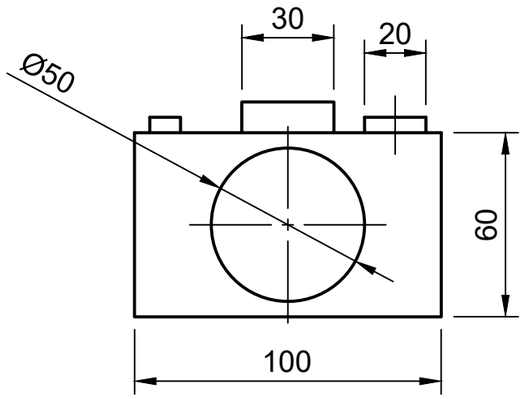

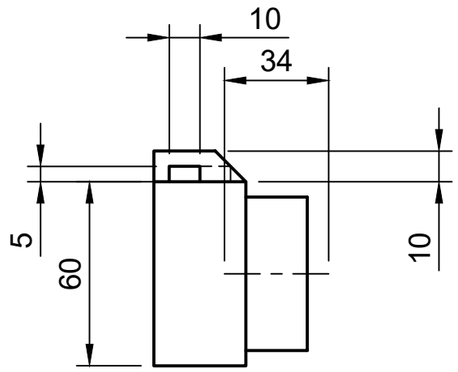

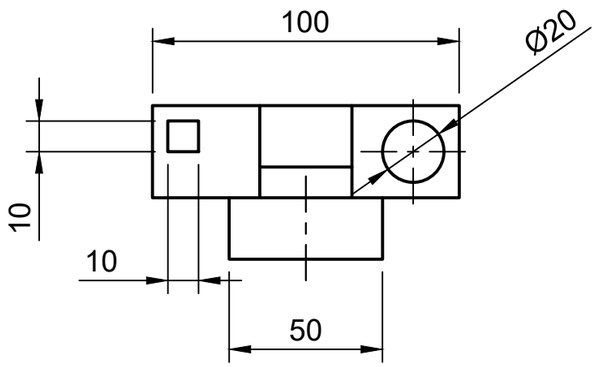

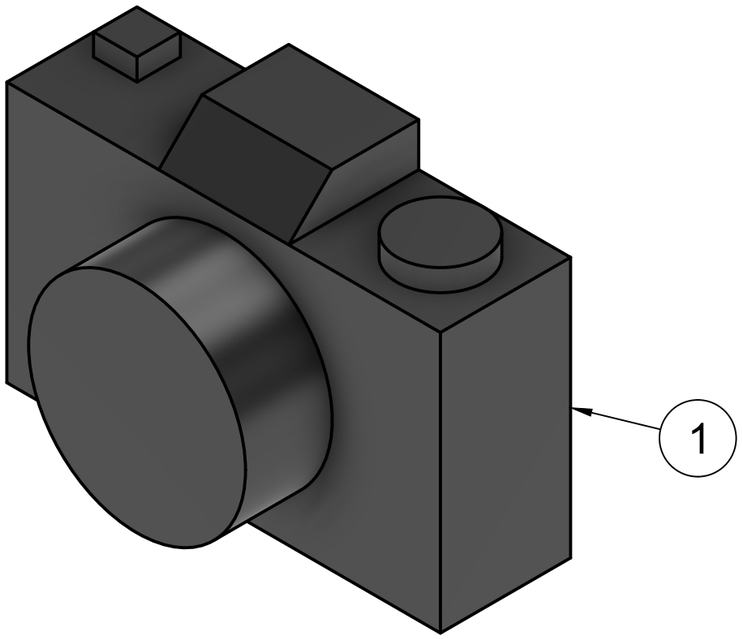

Dept.	Technical reference	Created by	Approved by
CSE	212225040230	MEGALA M S	DR.SARAVANAN M P
		Document type: SKETCH	Document status
		Title: EX:3:CREATE A 3D SOLID MODEL FROM ORTHOGRAPHIC PROJECTION	DWG No.
			Rev. E.N / Date of issue 2/12/26 / Sheet 1/1